HSTS08L

Features

- Low initial offset voltage and sensitivity error (typically 2 mV, 0.3%)
- Low temperature instability
- Built-in overvoltage and ESD protection
- Complies with standard JB/T 7490-2007

Basic Specifications

Type	Value
Rated Input	±5A ±10A ±15 ±20
Input Measurement Range	±6A ±12A ±18 ±20
Rated Output	2.5V±0.625V / 2.5V±2V

Type	Value	Remarks
Supply Voltage	4.8V ~ 5.2V	
Current Consumption	≤16mA	
Output Load	>10kΩ	
Operating Temperature	-40℃~+85℃	
Dielectric Strength	2.5KV	50Hz 1min
Weight	22	

Performance Specifications

Type	Typical values	Maximum value	Unit	Test Conditions / Remarks
Overall Accuracy				
Accuracy	±0.5	±0.8	%	Rated input current, 100% factory testing
Linearity	0.1	—	%	Range: 5%—120% IPN
Output Characteristics				
Zero-point offset voltage	±2	±5	mV	100% Factory Tested
—Temperature drift	±0.08	—	mV/℃	Vout -2.5V
Sensitivity Error	±0.3	—	%	Rated Input Current
—Temperature drift	30	—	ppm/℃	
Reference Voltage Characteristics				
Reference Voltage Error	±0.5	±1.25	mV	
—Temperature drift	50	0.015	ppm/℃	
Dynamic Performance				
Response Time	5	—	μs	Reach 90% of the final value
Frequency Bandwidth	60	—	kHz	-3dB

Note: Except for temperature-related parameters such as temperature drift and items otherwise specified, the parameters listed above apply to an ambient temperature of 25°C.

Dimensional Drawing(mm±0.5)

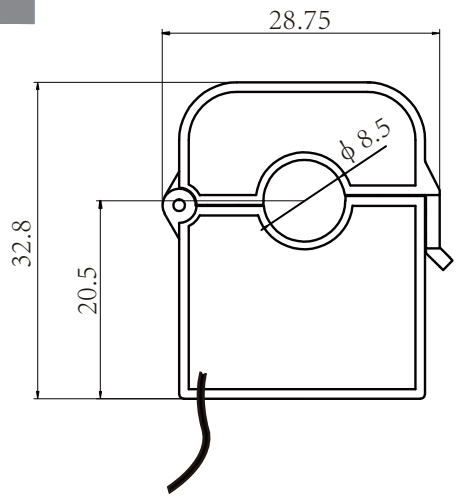

Front view

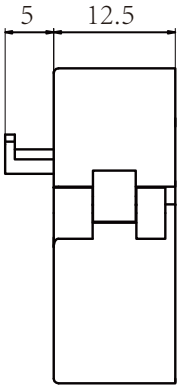

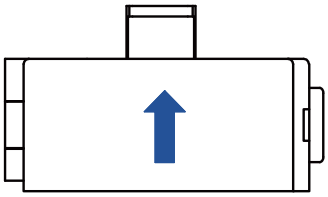

Side view

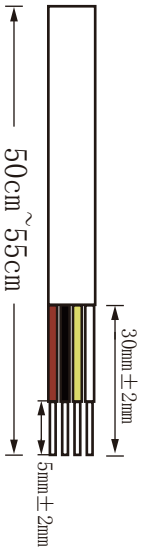

Wiring diagram (based on 0V)

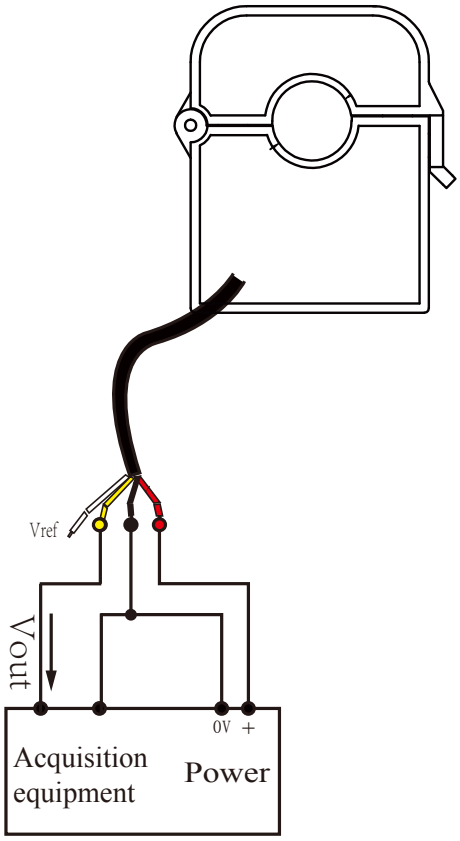

Definition of a Lead:

Red: V+

Black: 0V

Yellow: Vout

White: Vref

Cable :

Cable specification:0.2mm² four-core shielding wire
Four-core colors:Red,Black,Yellow,White
Cable length:50cm(50cm~55cm)

Calculation formula:5V±0.625V(or±2V)

Positive direction:2.5V+(I/Ipn)*0.625V(or±2V)

Negative direction:2.5V-(I/Ipn)*0.625V(or±2V)

Order Format: Reference Standards

Model + Rated Input Current + Rated Output Voltage + Supply Voltage
Example：HSTS08L ±10A/2.5V±2V/+5V