3-SCT016L-RJ12

YHDC®

Product picture printing is for reference only, subject to the actual product

Characteristics:

Three-phase integrated split core current transformer, easy installation, RJ12 connector output.

Technical index:

Mounting type: Free hanging (In-Line)

Material of core: Ferrite

Applicable standards: GB20840-2014

Operating temperature: -25℃ ~ +60℃

Storage temperature: -30℃ ~ +90℃

Frequency range: 50Hz-1KHz

Dielectric strength: Input (bare conductor)/Output AC 800V/1min 50Hz

Output/Housing AC 3.5KV/1min 50Hz

Electrical parameters:The following parameters are typical values. The actual values shall be subject to the actual measurement of the product

Rated input	10	50		100				120		A
Rated output	10	50	25	100	50	33	20	60	40	mA
Turns ratio	1:1000	1:1000	1:2000	1:1000	1:2000	1:3000	1:5000	1:2000	1:3000	-
Accuracy	0.5	0.5	0.5/0.2	0.5	0.5/0.2	0.5/0.2	0.5/0.2	0.5/0.2	0.5/0.2	%
Sampling resistance	10									Ω
Phase shift	≤184′									′
Weight	210									g

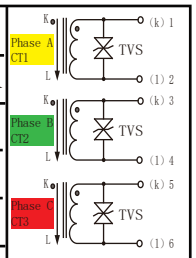

TVS: Transient Voltage Suppressor (7.5V)

Current output type

The secondary is not allowed to open circuit

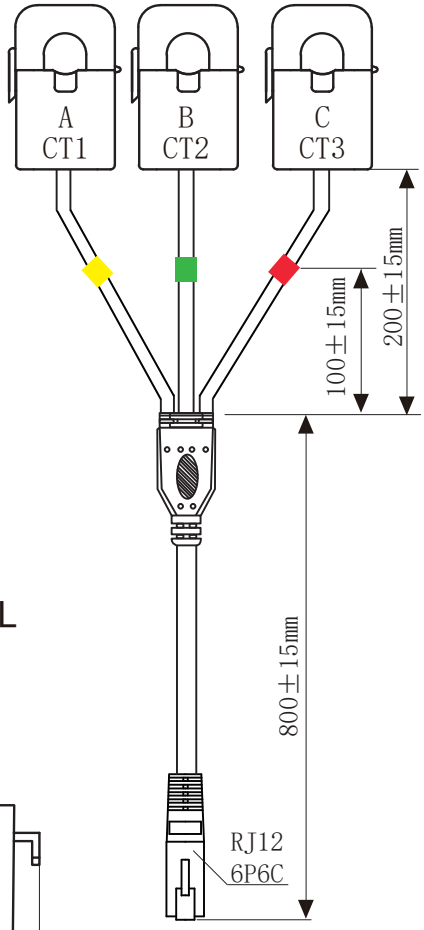

Dimensions (unit mm±0.5) :

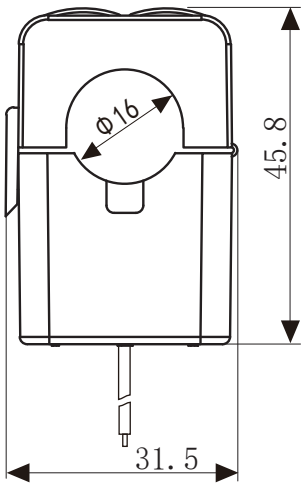

Front view

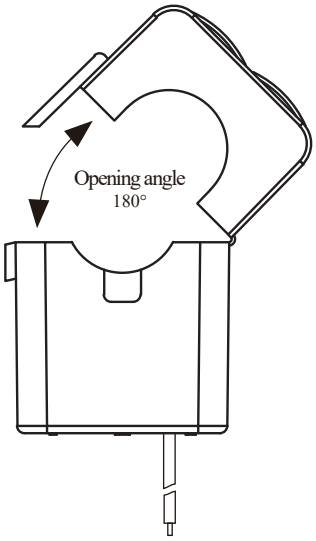

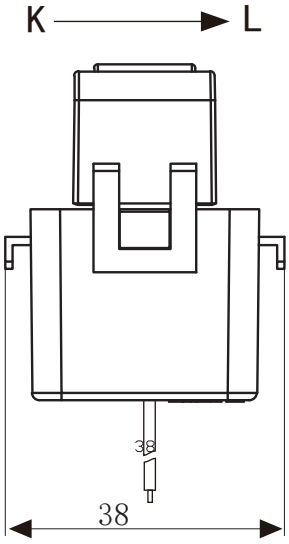
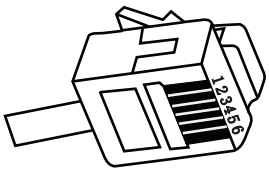
Side view